Application

Air-tight Connectors are ideally suited to blown fibre applications, where multiple lengths of tube need to be mated without air leakage.

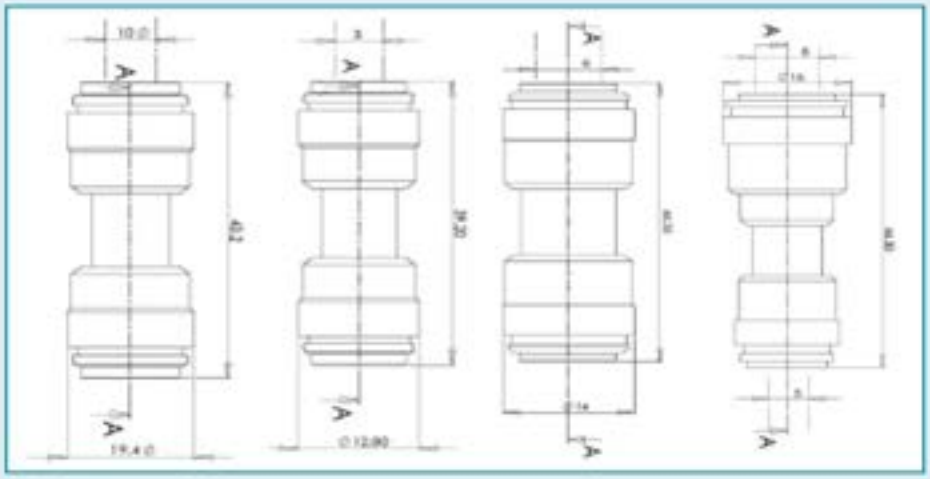

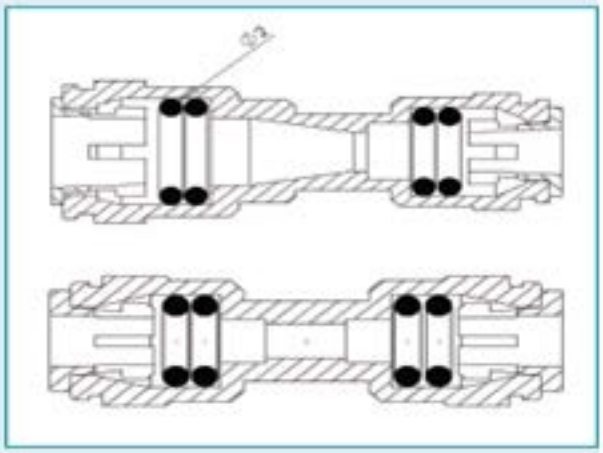

Features & Benefits

- Slim Profile
- Manufactured from clear material to allow inspection of the inserted fibre
- Double 'O' ring design to resist the ingress of zero pressure gas
- Re-usable gripper collet design for easy 'push-in' connection

Ordering Information for Air-Tight Connectors:

Part No.	Input & Output tube OD
ATC-3.0-3.0-POM-CLR	Ø3mm (single 'O' ring)
ATC-5.0-5.0-POM-CLR	ø5mm
ATC-8.0-8.0-POM-CLR	ø8mm
ATC-5.0-8.0-POM-CLR	5 to 8mm adaptor
ATC-10.0-10.0-POM-CLR	10mm (single 'O' rings)

Key Data

Maximum Assembly Effort: 30 N

Maximum Tube Retention: 150 N

Minimum Burst Pressure: 25 bar

Maximum Leakage at 8 bar: 1.0 cc/min

Max Leakage at 0.7 bar: 0.01 cc/mm

Resistance to External 70 kPa: Max 0.5 kPa drop / hr from 50 ml system

Operating Temperature Range: -20°C to +40°C

Note: The above characteristics are proven with Nylon tube to BS 5409

T: +44 (0) 1728 726600
E: enquiries@miniflex.co.uk
W: www.miniflex.co.uk

miniflex
OPTICAL FIBRE PROTECTION SYSTEMS

The information and data on this document are subject to change.
For current product specification please visit www.miniflex.co.uk